Parallel Slide Blowdown Valve Link type for small boilers

Description

These valves is an adaptation parallel slide valve which is designed

to ensures ease of operation and tight closure.

the valve being suitable for flow in either direction.

the valve opens with less than a quarter turn of the box-key.

a lever type box-key is supplied with each valve.

acc. to BS.759

Sizes and pipe connections

Dimensions are approximate and in mm.

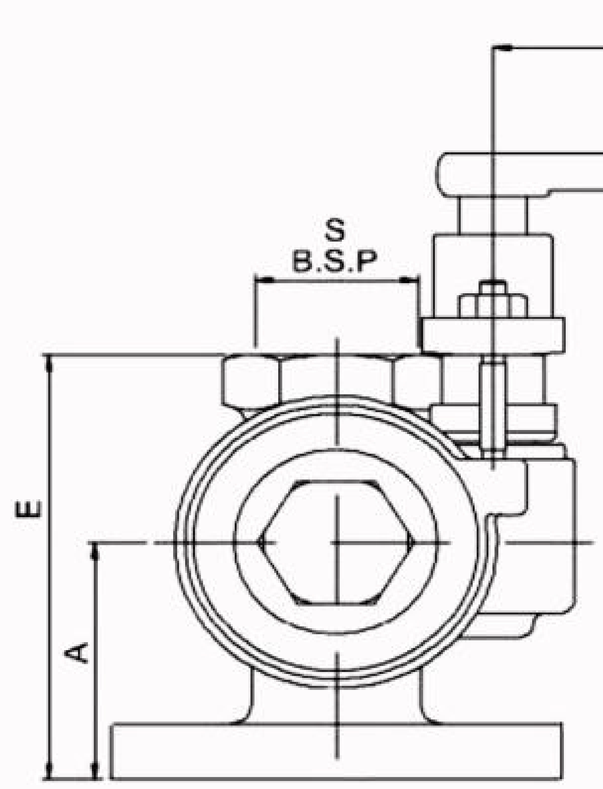

Size	Flange standard	S	L	A	E
1"	BS 10 Table F	1"	121	74.5	125.5
1 ¼"	BS 10 Table F	1 ¼"	149	77	138
1 ½"	BS 10 Table F	1 ½"	149	77	138

Limiting Conditions

Pressure/temperature rating	Pressure (bar)	18.5
	temperature	Steam at saturated temp.

Parallel Slide Blowdown Valve Link type for small boilers

Material

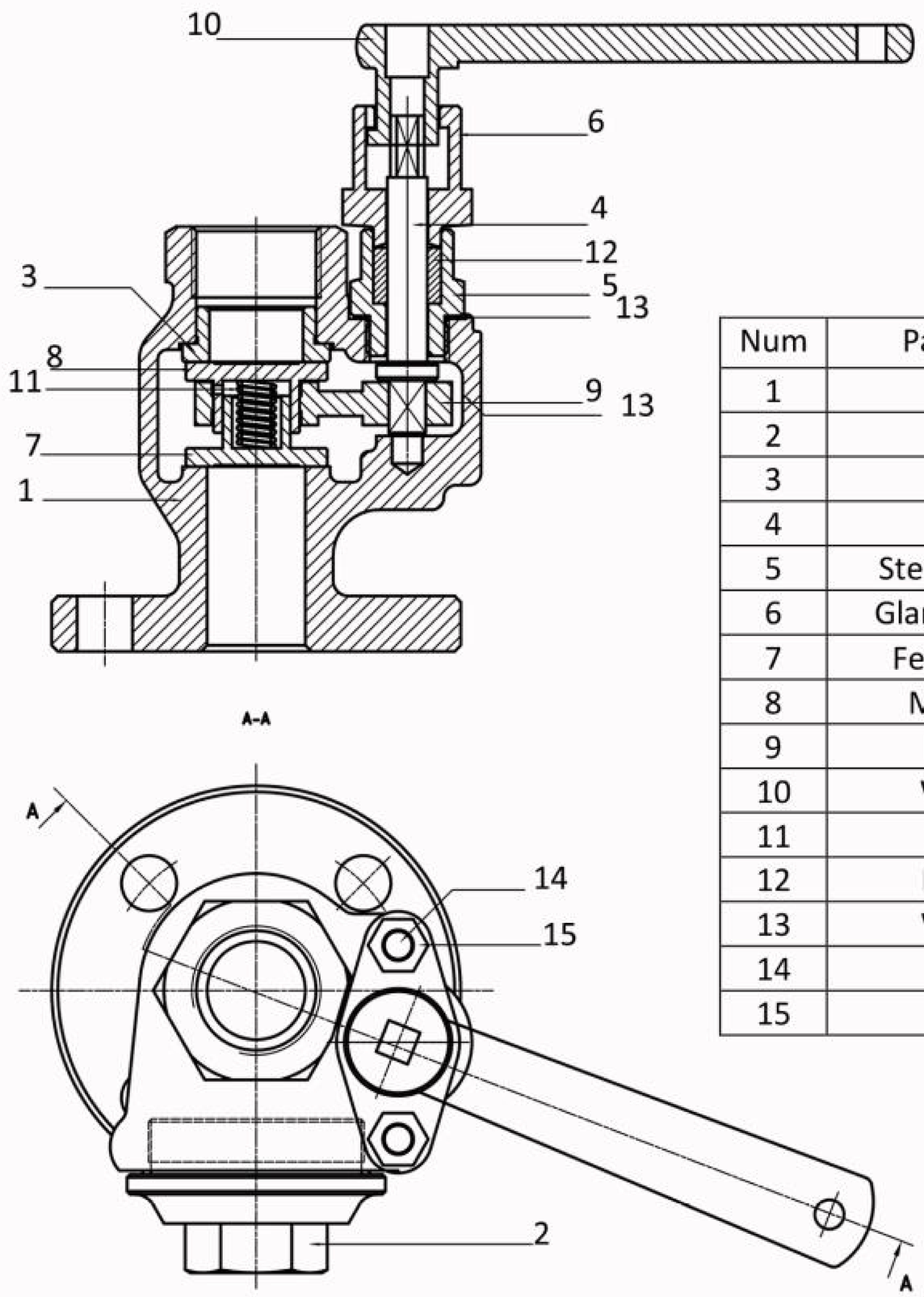

Num	Part name	Material
1	Body	Bronze
2	Plug	Bronze
3	Seat	Alloy nickel
4	Stem	Stainless Steel
5	Stem Bushing	Brass
6	Gland bushing	Bronze
7	Female disk	Alloy nickel
8	Male disk	Alloy nickel
9	Linkage	Bronze
10	Wrench	Cast iron (GG25)
11	Spring	Stainless Steel
12	Packing	Teflon packing
13	Washer	Copper
14	Stud	Steel
15	Nut	Steel

How to order

Connection size

working pressure and temperature: (bar, C)