Parallel Slide Blowdown Valve

Description

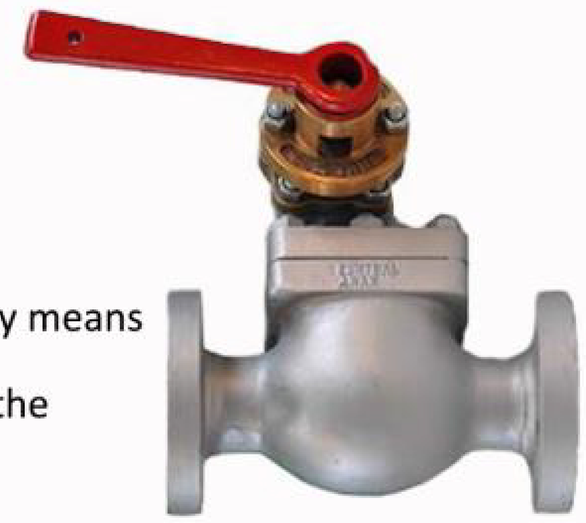

These valves are constructed on the parallel slide stop valve principle which provide an uninterrupted flow throw the valve and ensures easy operation and fluid tightness under all conditions of service. operation is by means of rack and pinion removable box-key. a stop on the pinion shaft prevents the possibility of straining the rack and pinion teeth at the ends of travel. the gland is fitted with a special locking guard which prevents the removal of the box-key unless the valve is closed.acc. to BS.759

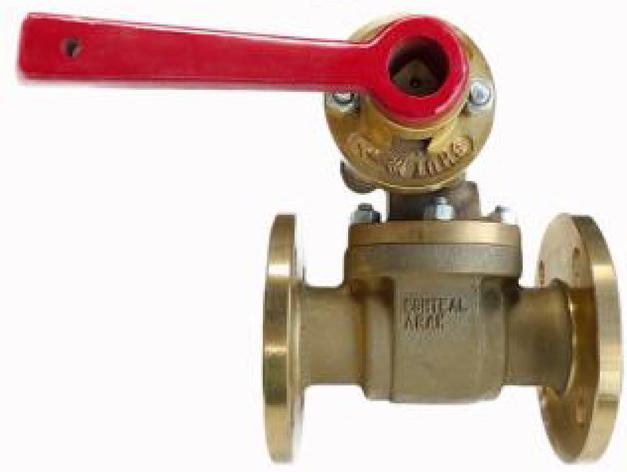

Sizes and pipe connections

Dimensions are approximate and in mm.

Body material	Size	Flange Standard	F	N	O	P	L	H	M	S	J	K
Bronze 150 psi	2”	BS 10 Table F	165	4	17	127	188	212.5	129.5	20	19	145
		BS 1560 Class150	165	4	17	127	210	212.5	129.5	20	20	145
		BS 4505 PN16	165	4	19	125	188	212.5	129.5	20	19	145
Gunmetal 300 psi	2”	BS 10 Table H	165	4	17	127	198	212.5	129.5	20	19	145
		BS 1560 Class 300	165	8	19	127	198	212.5	129.5	20	19	145
		BS 4505 PN40	165	4	19	125	198	212.5	129.5	20	19	145
Steel 300 psi	1 ½”	BS 10 Table H	140	4	17	105	267	254	171	20	19	145
		BS 1560 Class300	156	4	22	114						
		BS 4505 PN40	150	4	19	110						
	1 ¼”	BS 10 Table H	133	4	17	98	261	254	171	20	20	145
		BS 1560 Class300	133	4	19	98						
		BS 4505 PN40	140	4	19	100						

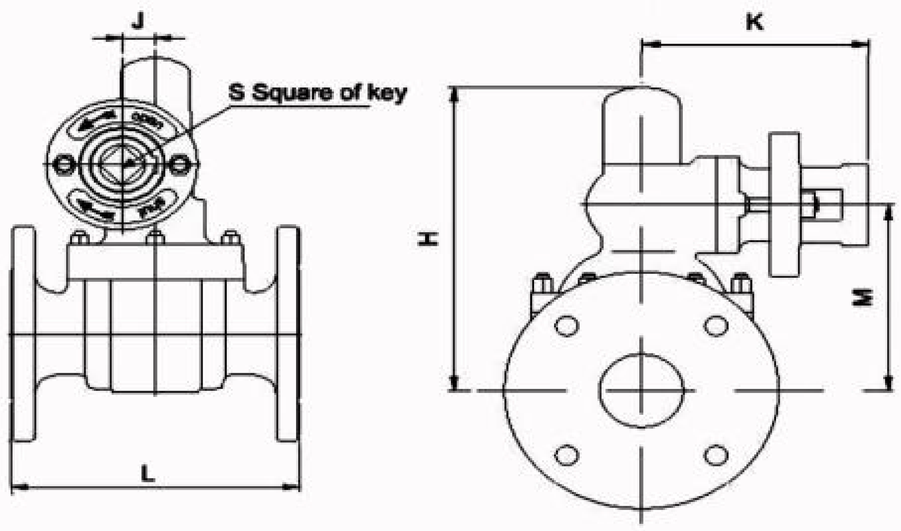

Body material Bronze & Gunmetal

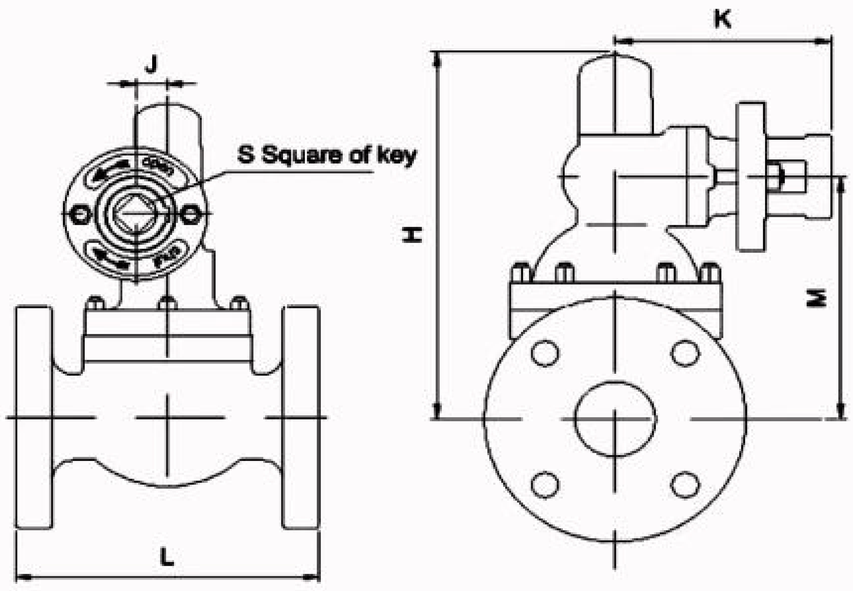

Body material : Cast Steel

Parallel Slide Blowdown Valve

Limiting Conditions

Flange standard	Pressure / temperature rating							
BS 4505 PN16	Temperature (˚C)	-18 to 121	149	177	204	232	260	-
	Pressure (bar)	20.7	20.7	20.7	16.9	13.4	10.3	-
BS 4505 PN40	Temperature (˚C)	-18 to 121	150	180	200	220	250	260
	Pressure (bar)	25	25	25	21.2	17.5	12.2	10.5
Table F	Temperature (˚C)	-18 to 120	150	149	177	204	232	260
	Pressure (bar)	16	16	16	13.51	11.3	8	7
Table H	Temperature (˚C)	-18 to 120	150	149	177	204	232	260
	Pressure (bar)	25	25	25	21.2	17.5	12.2	10.5

Material

Num.	Part name	Material		
1	Body	Bronze casting	Cast steel (A216-WCB)	Gunmetal
2	Seat	Nickel alloy		
3	Rack	Gunmetal		
4	Pinion	Gunmetal		
5	Bonnet	Bronze	Cast steel (A216-WCB)	Gunmetal
6	Packing bushing	Bronze		
7	Gland bushing	Bronze		
8	Female disk	Nickel alloy		
9	Male disk	Nickel alloy		
10	spring	Stainless steel		

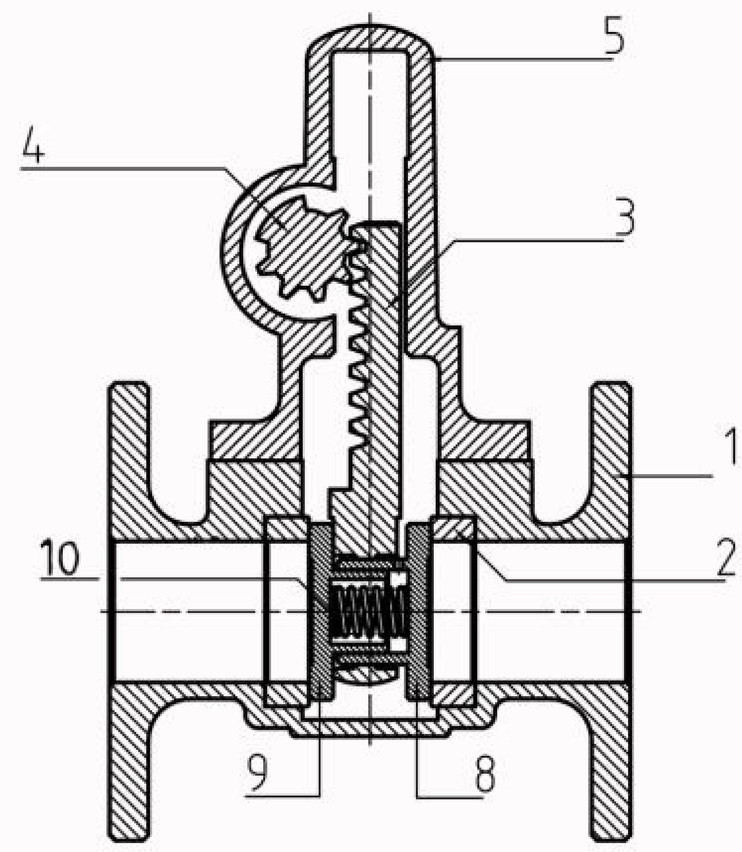

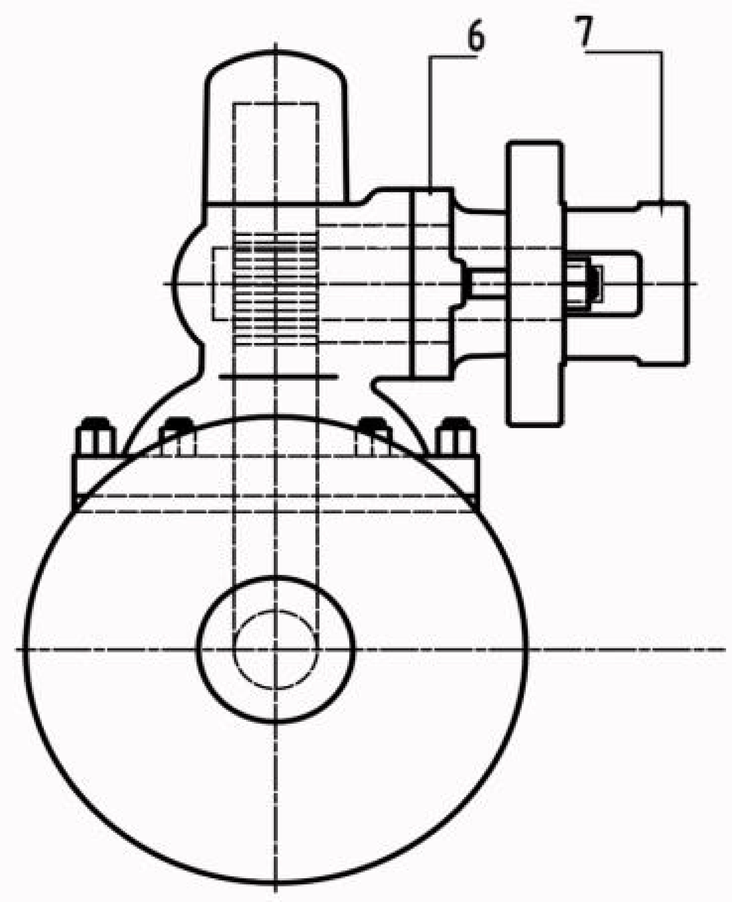

How to order

Connection size

Fluid and working conditions